LONG SEAMS

COURSE	ORIENTATION	ORIENTATION
1(TOP)	90°	270°
2	95°	275°
3	90°	270°
4	95°	275°

*VERT – TOP TO BOTTOM

Ship loose items:
(1 PC.) Swing gate (A71-24 (Galv.))
(1 PC.) Caged Ladder W/ Hardware
(2 PCS.) Handrail W/ Hardware

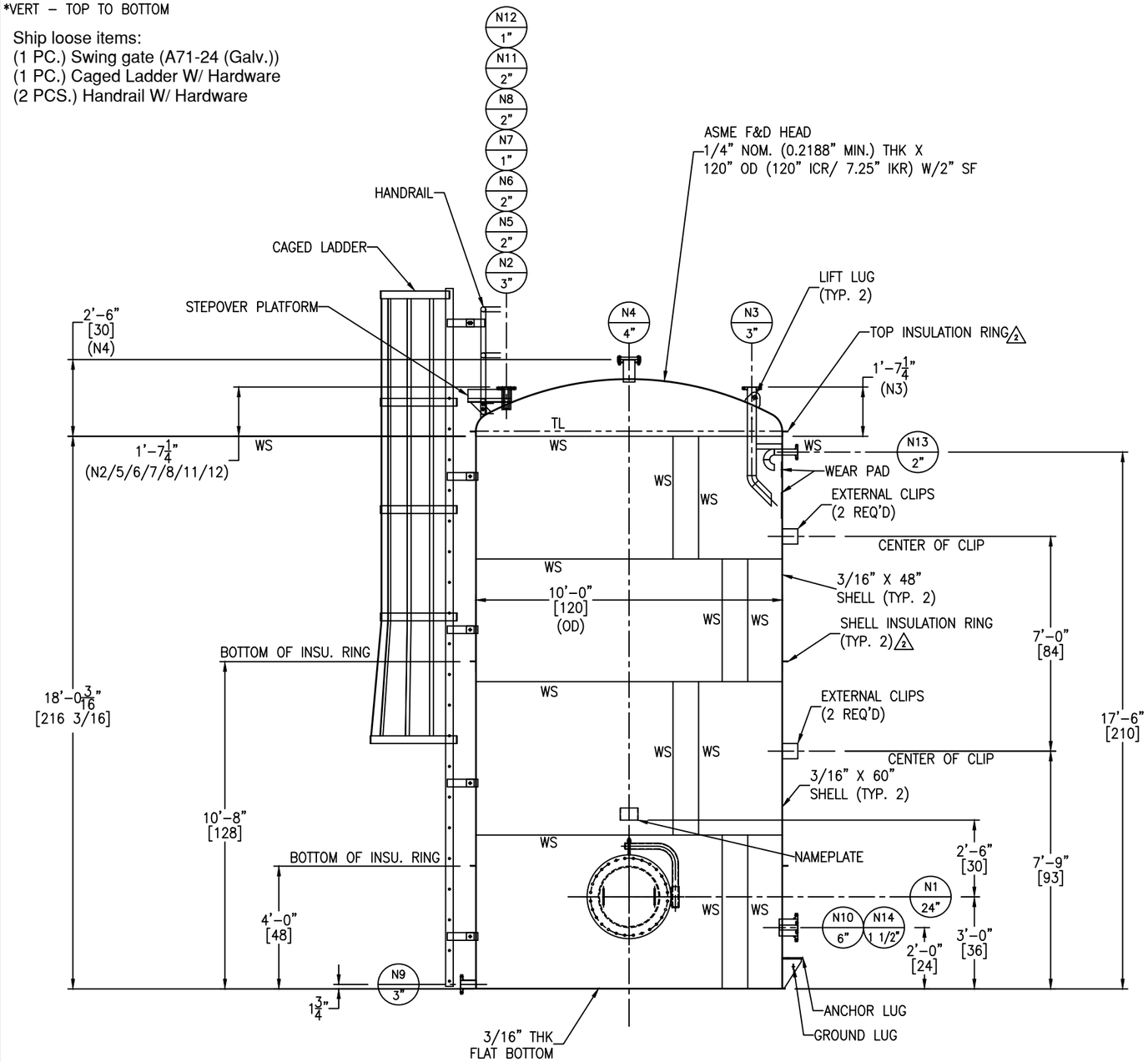

FC-14 GT-11

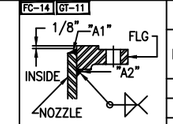

FIGURE NO. 1

FC-14 GT-11

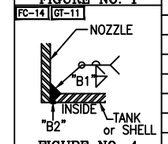

FIGURE NO. 4

FC-14 GT-11

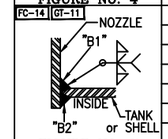

FIGURE NO. 7

FC-14 SA-30

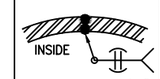

SHELL THK. < 5/16"

FIGURE NO. 9

FC-14 SA-30

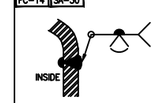

FOR HEADS
FIGURE NO. 11

NOZZLE SCHEDULE

MARK	SERVICE	SIZE	RATING	TYPE / STYLE	NECK SCHED.	PROJECTION EXT. (℄)	PROJECTION INT. (MIN.)	WELD FIGURE	REPAD SIZE (WIDTH X THK.)	WELD SIZE "A1"	"A2"	"B1"	"B2"	"C1"	"C2"
N1	MANWAY	24"	–	API W/DAVIT	1/4"	6"	1"	7	–	–	–	1/4	1/8	–	–
N2	VENT	3"	150#	RFSO	40S	SEE DWG	–	1,4	–	3/16	1/4	3/16	1/8	–	–
N3	LIQUID INLET	3"	150#	RFSO	40S	SEE DWG	SEE DWG	1,7	–	3/16	1/4	3/16	1/8	–	–
N4	SPARE	4"	150#	RFSO W/BLIND	40S	SEE DWG	1"	1,7	–	1/4	7/16	1/4	1/8	–	–
N5	LEVEL TRANSMITTER	2"	150#	RFSO	80S	SEE DWG	1"	1,7	–	3/16	1/4	3/16	1/8	–	–
N6	LEVEL SWITCH	2"	150#	RFSO	80S	SEE DWG	1"	1,7	–	3/16	1/4	3/16	1/8	–	–
N7	NITROGEN INLET	1	150#	RFSO	40S	SEE DWG	1"	1,7	–	3/16	1/4	3/16	1/8	–	–
N8	VAPOR EQUALIZATION	2"	150#	RFSO	80S	SEE DWG	1"	1,7	–	3/16	1/4	3/16	1/8	–	–
N9	BOTTOM OUTLET	3"	150#	RFSO	40S	6"	–	1,4	–	1/4	5/16	1/4	1/8	–	–
N10	BAYONET HEATER	6"	150#	RFSO	40S	6"	1"	1,7	–	1/4	1/4	1/4	1/4	–	–
N11	PRESSURE	2"	150#	RFSO	80S	SEE DWG	1"	1,7	–	3/16	1/4	3/16	1/8	–	–
N12	PRESSURE SENSING	1"	150#	RFSO	40S	SEE DWG	1"	1,7	–	3/16	3/16	3/16	1/8	–	–
N13	RECIRC RETURN	2"	150#	RFSO W/ ELBOWS	80S	6"	SEE DWG	1,7	–	3/16	3/16	1/4	1/4	–	–
N14	TEMPERATURE	1 1/2"	150#	RFSO	80S	6"	1"	1,7	–	3/16	3/16	1/4	1/4	–	–

MATERIALS OF CONSTRUCTION

	VESSEL
SHELL	SA240-316/316L
HEADS	SA240-316/316L
RIM ANGLE	–
NOZZLE NECKS	SA312-316/316L WLD & SA403-316/316L
NOZZLE FLANGES	SA182F-316/316L
MANWAY NECKS	SA240-316/316L
MANWAY FLANGES	SA240-316/316L
GASKETS	PTFE
BOLTS/STUDS	SA193-B7 (ZINC PLATED)
NUTS	SA194-2H (ZINC PLATED)
WEAR PAD	SA240-316/316L
COUPLINGS	–
SUPPORTS/HOLD DOWNS	SA240-304/304L
LIFTING LUGS	SA240-304/304L
VACUUM RINGS	–
INSULATION RINGS	SA240-304/304L
GROUND LUG	SA240-304/304L
BAFFLE	–
LADDER	SA36
TANK CLIPS	SA240-304/304L
LADDER CLIPS	SA36
HANDRAIL	SA500
HANDRAIL CLIPS	SA36
POST CLIPS	SA479-304/304L
DIPTUBE SUPPORT	SA240-316/316L
PLATFORM	SA240-304/304L
PLATFORM SUPPORT	SA240-304/304L
JACKET NOZZLE NECKS	–
JACKET NOZZLE FLANGES	–

DESIGN DATA

	VESSEL
DESIGN AND FAB. CODE	API650 (AS APPLICABLE)
CERT. STAMP REQ'D.	NO
DESIGN PRESSURE	1 PSIG
DESIGN TEMPERATURE	200° F
MIN. DESIGN METAL TEMP.	-20° F @ 1 PSIG
OPERATING PRESSURE	1 PSIG
OPERATING TEMPERATURE	120° F
JOINT EFFICIENCY HEADS	0.70
JOINT EFFICIENCY SHELL	0.70
CORROSION ALLOWANCE	0"
SPECIFIC GRAVITY	0.89
EARTHQUAKE ZONE	Ss = (0.550) S1 = (0.160)
WIND LOAD	104 MPH
STRESS RELIEF	NOT REQ'D
RADIOGRAPHIC EXAM	NOT REQ'D
DYE PENETRANT EXAM	NOT REQ'D
MAGNETIC PARTICLE EXAM	NOT REQ'D
HYDROSTATIC TEST	NOT REQ'D
PNEUMATIC TEST	2 PSIG
JKT DESIGN AND FAB. CODE	–
JKT CERT. STAMP REQ'D.	–
JKT DESIGN PRESSURE	–
JKT DESIGN TEMPERATURE	–
JKT MIN. DESIGN METAL TEMP.	–
JKT OPERATING PRESSURE	–
JKT OPERATING TEMPERATURE	–
JKT JOINT EFFICIENCY HEADS	–
JKT JOINT EFFICIENCY SHELL	–
JKT HYDRO TEST	–

VESSEL FINISH

INTERIOR WELD TREATMENT:	SAV TANK STANDARD
EXTERIOR WELD TREATMENT:	SAV TANK STANDARD
SAV TANK FINISHING STANDARD:	SEE NOTE 5
INSULATION:	2 2" BY OTHERS
GALVANIZING:	SEE NOTE 6

VESSEL CAPACITY AND WEIGHTS

OPERATING CAPACITY	9,000 GAL.
FULL CAPACITY	11,100 GAL.
EMPTY SHIPPING WEIGHT W/O ACCESSORIES	2 7,600 LBS.
WEIGHT FULL OF WATER	2 101,800 LBS.
WEIGHT FULL OF PRODUCT	2 91,500 LBS.
WEIGHT OF ACCESSORIES	1,000 LBS.

QUALITY CONTROL

ENG. _____ DATE: _____

Q.C. _____ DATE: _____

This drawing is issued for customer approval. please review, make approval changes (if any) in red. check the appropriate box, sign & date.

- ☐ Approval – no changes. Please proceed with fabrication.
- ☐ Approved as noted. Please proceed with fabrication
- ☐ Not approved. Please make changes and resubmit.

Customer signature _____ Date _____

GENERAL NOTES

1.) COVER ALL FLANGES, OPENINGS & MACHINED SURFACES PRIOR TO SHIPMENT UNLESS OTHERWISE NOTED.
2.) BOLT HOLES TO STRADDLE 0° & 180° UNLESS OTHERWISE NOTED.
3.) MANUFACTURING TOLERANCE TO BE IN ACCORDANCE WITH API STANDARD 650 7.5.
4.) ASME MATERIALS TO CONFORM TO THE FOLLOWING: FLANGES – B16.5, FITTINGS – B16.9 & COUPLINGS – B16.11.
5.) PICKLE ALL EXTERIOR WELDS. PASSIVATE INTERIOR & EXTERIOR OF VESSEL.
6.) GALVANIZING: HANDRAIL & LADDER TO BE HOT DIPPED GALVANIZED.

REVISIONS

REV	D.BY	C.BY	DATE	DESCRIPTION
				AS BUILT
2	AD	RS	2/4/26	CERTIFIED
1	RS	NP	1/21/26	APPROVAL REV 1
0	AD	RS	12/9/25	APPROVAL

Savannah Tank & Equipment Corp.
1517 Telfair Road, Savannah, GA 31415
(912) 233-8902

DRAWN BY: AD
CHK'D BY: RS
APPROVED BY: NP
SCALE: 3/8" = 1'-0"

EPIC SYSTEMS GROUP, LLC.
ISOSTEARIC ACID TANK
EQUIP. #T-104
CUST. PO #64354

DRAWING NO.: 103-25-1 SHT 1 OF 6 REV. SET 2

LONG SEAMS

COURSE	ORIENTATION	ORIENTATION
1(TOP)	90°	270°
2	95°	275°
3	90°	270°
4	95°	275°

*VERT – TOP TO BOTTOM

Ship loose items:
(1 PC.) Swing gate (A71-24 (Galv.))
(1 PC.) Caged Ladder W/ Hardware
(2 PCS.) Handrail W/ Hardware

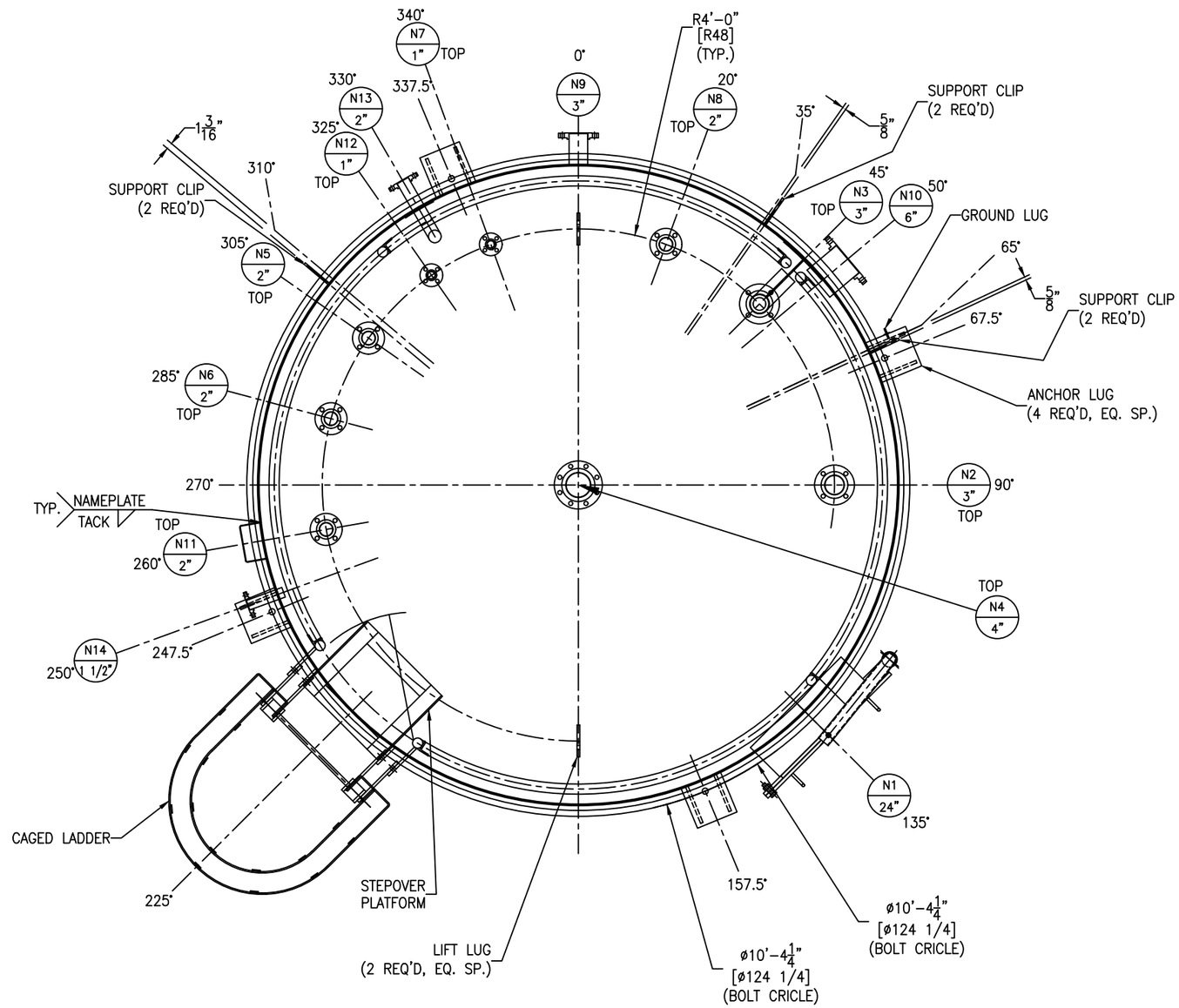

REV	D.BY	C.BY	DATE	DESCRIPTION
				AS BUILT
2	AD	RS	2/4/26	CERTIFIED
1	RS	NP	1/21/26	APPROVAL REV 1
0	AD	RS	12/9/25	APPROVAL

⚠ REVISIONS

Savannah Tank & Equipment Corp.
1517 Telfair Road, Savannah, GA 31415
(912) 233-8902

DRAWN BY: AD
CHK'D BY: RS
APPROVED BY: NP
SCALE: 3/4" = 1'-0"

EPIC SYSTEMS GROUP, LLC.
ISOSTEARIC ACID TANK
EQUIP. #T-104
CUST. PO #64354

DRAWING NO.: 103-25-2 SHT 2 OF 6 REV. SET 2

FC-14

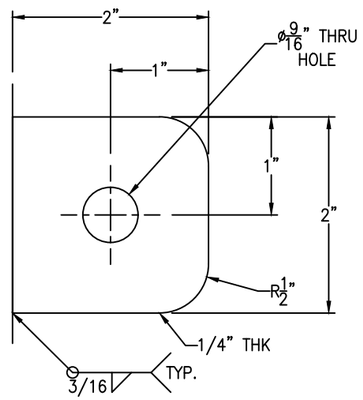

GROUND LUG IS LOCATED @ 67.5°

GROUND LUG DETAIL

(1 REQ'D) SCALE: 1'-0" = 1'-0"

FC-14

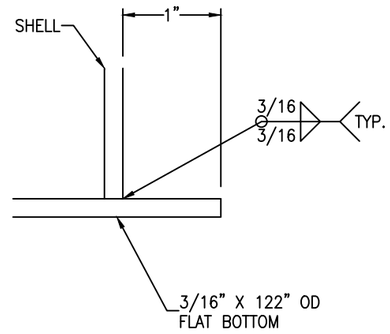

FLAT BOTTOM DETAIL

SCALE: 1'-0" = 1'-0"

FC-14

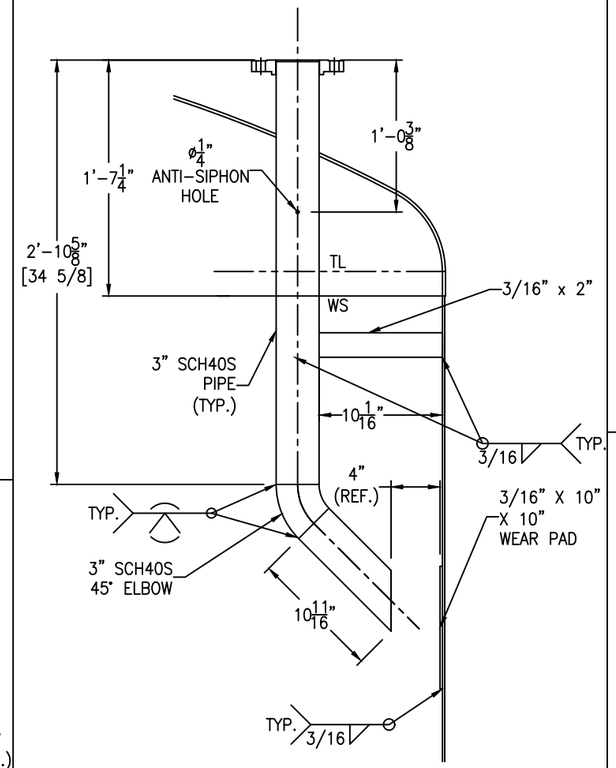

NOZZLE N3 DETAIL

SCALE: 1 1/2" = 1'-0"

FC-14

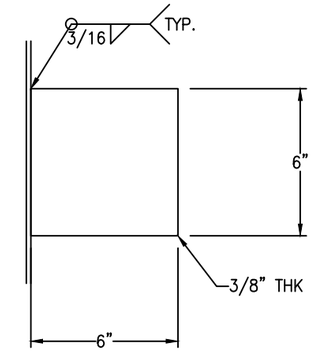

CLIPS DETAIL

(2+2+2 REQ'D) SCALE: 3" = 1'-0"

FC-14

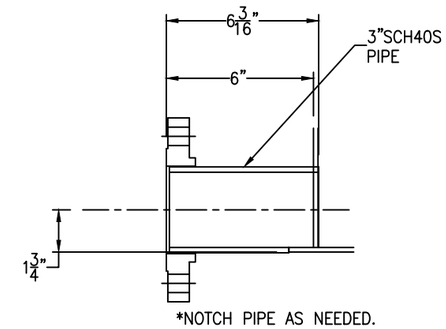

*NOTCH PIPE AS NEEDED.

NOZZLE N9 DETAIL

SCALE: 3" = 1'-0"

FC-14

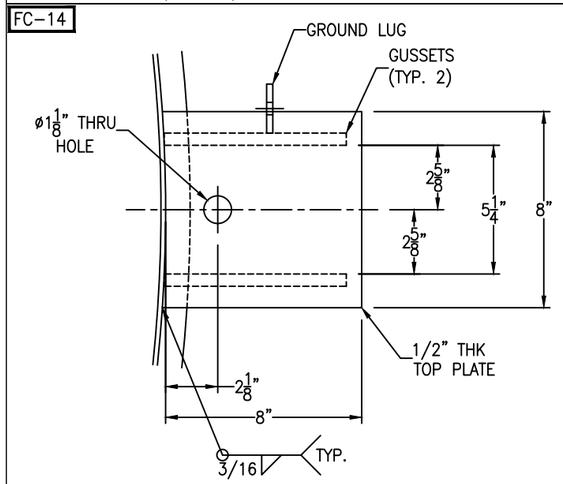

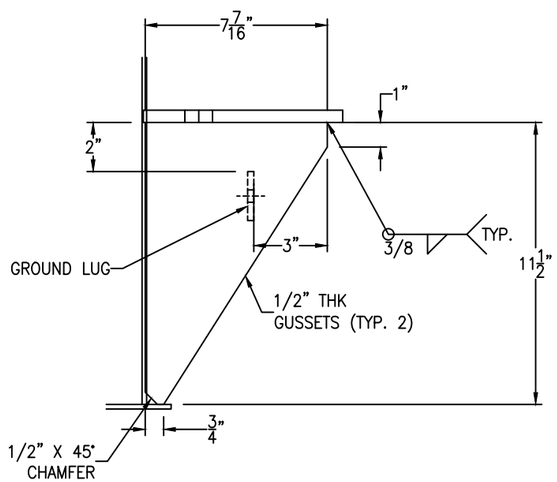

ANCHOR LUG DETAIL

(4 REQ'D) SCALE: 3" = 1'-0"

FC-14

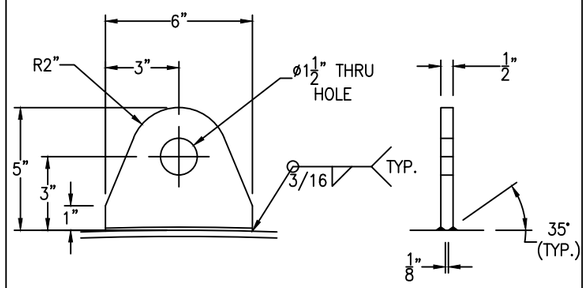

TANK WT. <= 10000#
SHACKLE PIN DIA. = 1"

LIFT LUG DETAIL

(2 REQ'D) SCALE: 3" = 1'-0"

FC-14

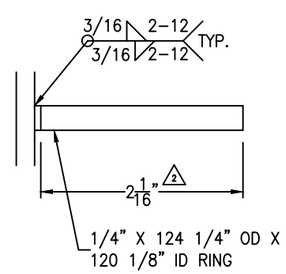

SEE SHEET #1 FOR ELEVATION

SHELL INSULATION RING DETAIL

(2 REQ'D) SCALE: 1'-0" = 1'-0"

FC-14

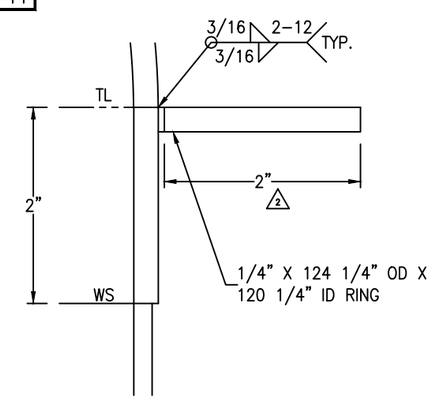

TOP INSULATION RING DETAIL

SCALE: 1'-0" = 1'-0"

FC-14

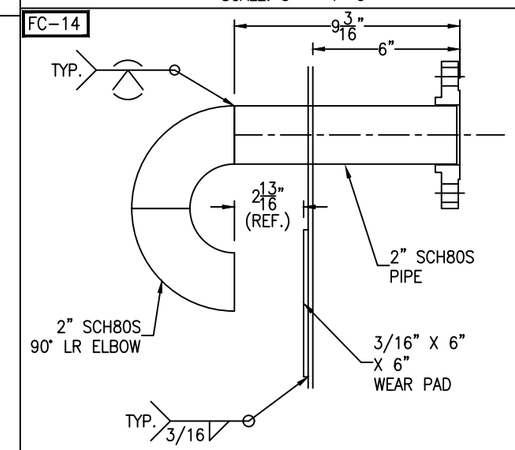

NOZZLE N13 DETAIL

SCALE: 3" = 1'-0"

Bolting for blinds
N4: (8) 5/8"-11 NC x 3" HH BOLT
(8) 5/8"-11 NC HH NUT
(1) 4" 150# RING GASKET X 1/8" THK (PTFE)

REV	D.BY	C.BY	DATE	DESCRIPTION
				AS BUILT
2	AD	RS	2/4/26	CERTIFIED
1	RS	NP	1/21/26	APPROVAL REV 1
0	AD	RS	12/9/25	APPROVAL

△1 REVISIONS

Savannah Tank & Equipment Corp.
1517 Telfair Road, Savannah, GA 31415
(912) 233-8902

DRAWN BY: AD
CHK'D BY: RS
APPROVED BY: NP
SCALE: 3/8" = 1'-0"

EPIC SYSTEMS GROUP, LLC.
ISOSTEARIC ACID TANK
EQUIP. #T-104
CUST. PO #64354

DRAWING NO.: 103-25-3 | SHT 3 OF 6 | REV. SET 2

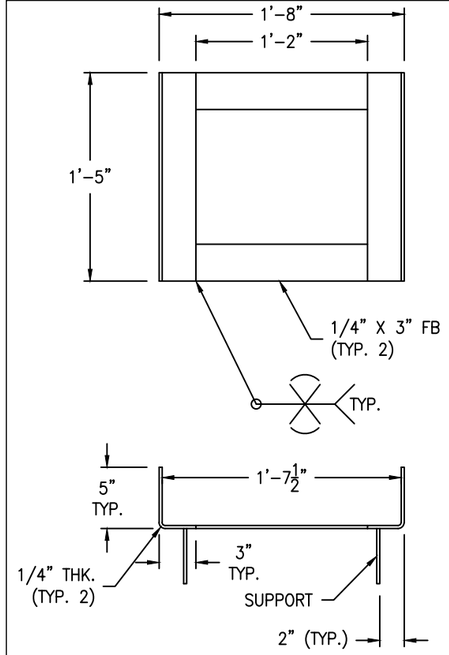

STEPOVER FRAME DETAIL (SS304)

(1 REQ'D) SCALE: 1 1/2" = 1'-0"

FC-14

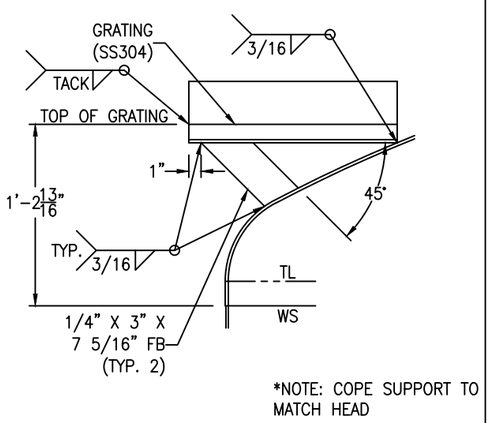

STEPOVER DETAIL

(1 REQ'D) SCALE: 1 1/2" = 1'-0"

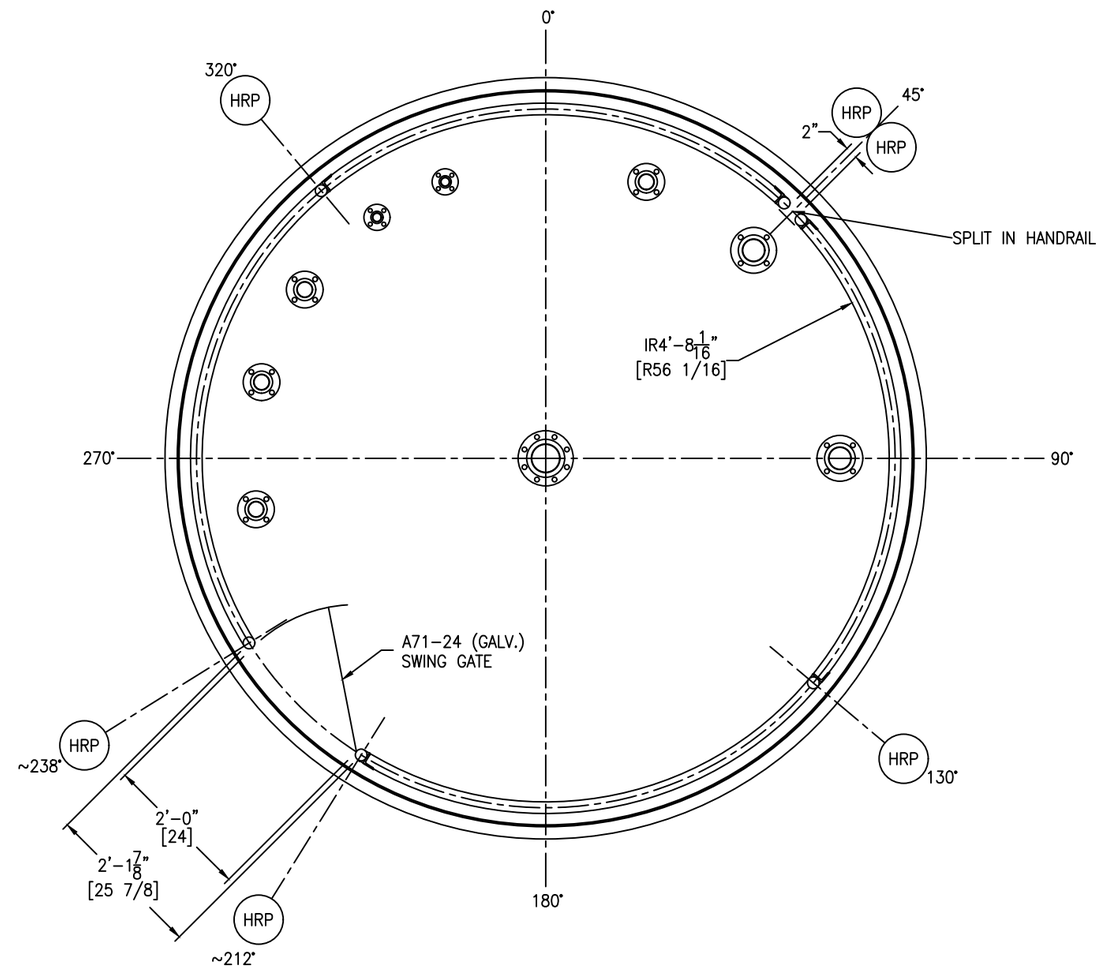

HANDRAIL DETAIL

SCALE: 3/4" = 1'-0"

FC-14

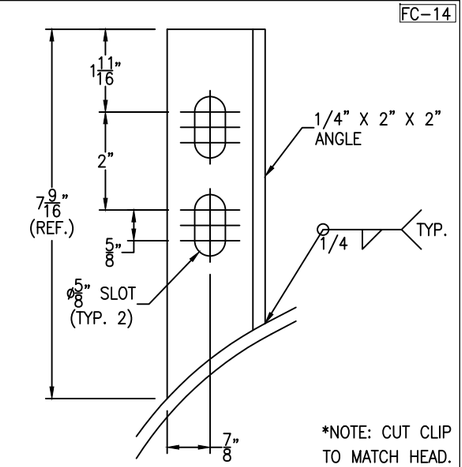

POST CLIP DETAIL

(6 REQ'D) SCALE: 6" = 1'-0"

GM-73

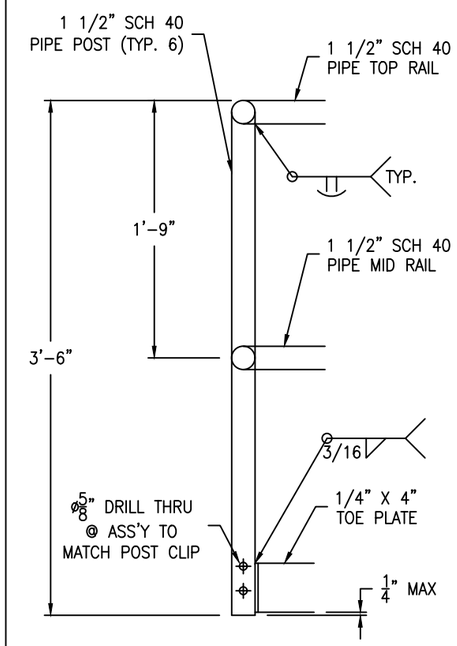

HANDRAIL DETAIL

SCALE: 1 1/2" = 1'-0"

HANDRAIL BOLTING:
(12) 1/2-13 NC X 3" HH BOLT - SA193-B7 (ZINC PLATED)
(12) 1/2-13 NC HH NUT - SA194-2H (ZINC PLATED)

HANDRAIL TO BE HOT-DIPPED GALVANIZED

REV	D.BY	C.BY	DATE	DESCRIPTION
				AS BUILT
2	AD	RS	2/4/26	CERTIFIED
1	RS	NP	1/21/26	APPROVAL REV 1
0	AD	RS	12/9/25	APPROVAL

1 REVISIONS

Savannah Tank & Equipment Corp.
1517 Telfair Road, Savannah, GA 31415
(912) 233-8902

DRAWN BY: AD
CHK'D BY: RS
APPROVED BY: NP
SCALE: 3/8" = 1'-0"

EPIC SYSTEMS GROUP, LLC.
ISOSTEARIC ACID TANK
EQUIP. #T-104
CUST. PO #64354

DRAWING NO.: 103-25-4 SHT 4 OF 6 REV. SET 2

LADDER CLIP BOLTING:
(10) 5/8-11 NC X 2" HH BOLT - SA193-B7 (ZINC PLATED)
(10) 5/8-11 NC HH NUT - SA194-2H (ZINC PLATED)

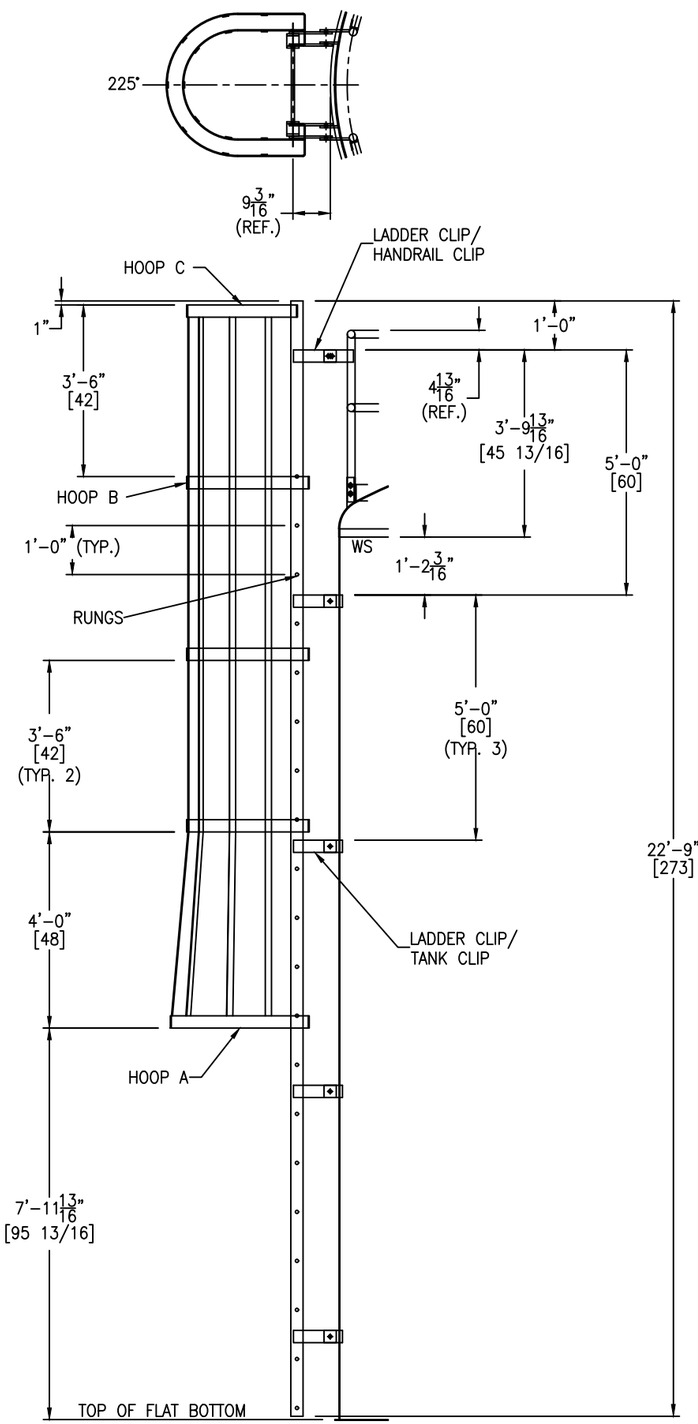

LADDER DETAIL
SCALE: 1/2" = 1'-0"

GM-73

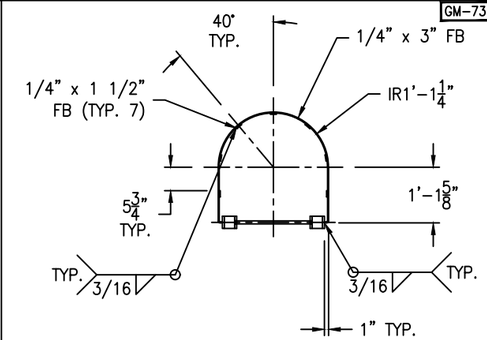

HOOP "C" DETAIL
(1 REQ'D) SCALE: 1/2" = 1'-0"

GM-73

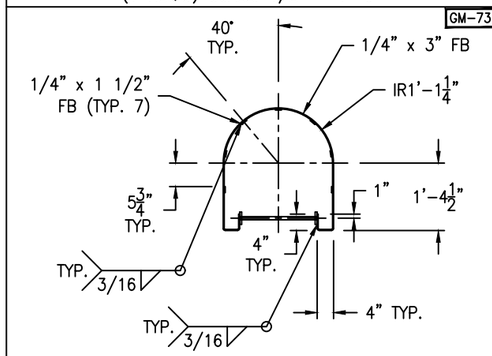

HOOP "B" DETAIL
(3 REQ'D) SCALE: 1/2" = 1'-0"

GM-73

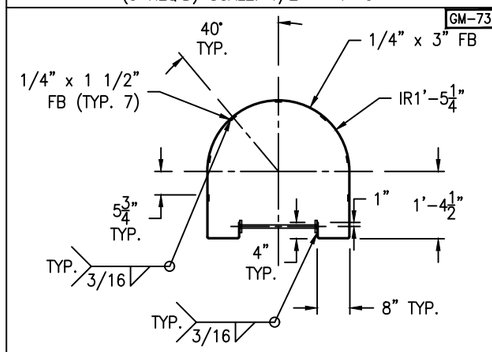

HOOP "A" DETAIL
(1 REQ'D) SCALE: 1/2" = 1'-0"

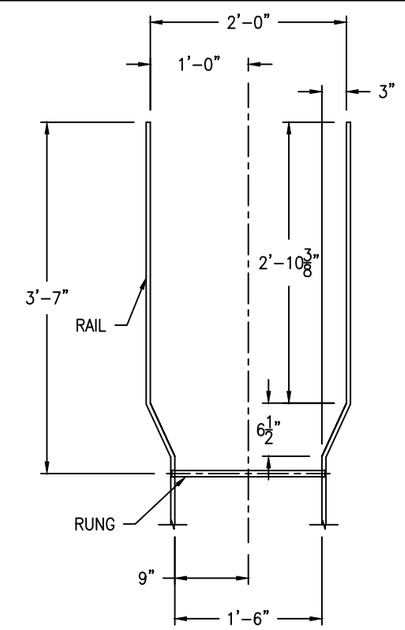

WALK-THRU DETAIL
SCALE: 1" = 1'-0"

GM-73

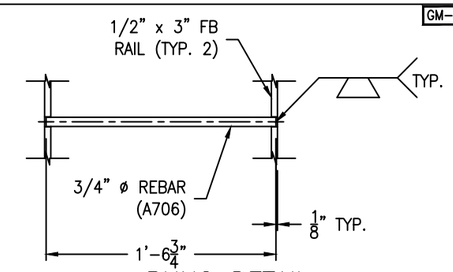

RUNG DETAIL
(20 REQ'D) SCALE: 1 1/2" = 1'-0"

GM-73

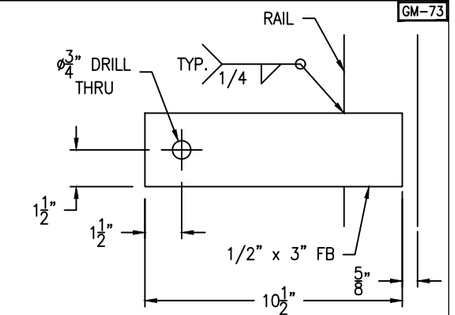

LADDER CLIP DETAIL
(10 REQ'D) SCALE: 3" = 1'-0"

FC-14

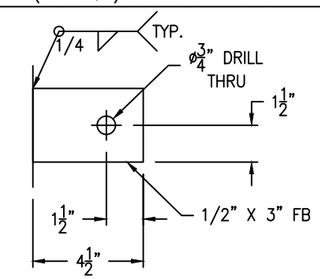

TANK CLIP DETAIL
(8 REQ'D) SCALE: 3" = 1'-0"

GM-73

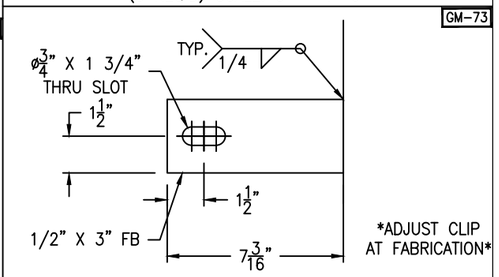

HANDRAIL CLIP DETAIL
(2 REQ'D) SCALE: 3" = 1'-0"

LADDER TO BE HOT-DIPPED GALVANIZED

REV	D.BY	C.BY	DATE	DESCRIPTION
				AS BUILT
2	AD	RS	2/4/26	CERTIFIED
1	RS	NP	1/21/26	APPROVAL REV 1
0	AD	RS	12/9/25	APPROVAL

⚠ REVISIONS

Savannah Tank & Equipment Corp.
1517 Telfair Road, Savannah, GA 31415
(912) 233-8902

DRAWN BY: AD
CHK'D BY: RS
APPROVED BY: NP
SCALE: 1/4" = 1'-0"

EPIC SYSTEMS GROUP, LLC.
ISOSTEARIC ACID TANK
EQUIP. #T-104
CUST. PO #64354

DRAWING NO.: 103-25-5 SHT 5 OF 6 REV. SET 2

FC-14

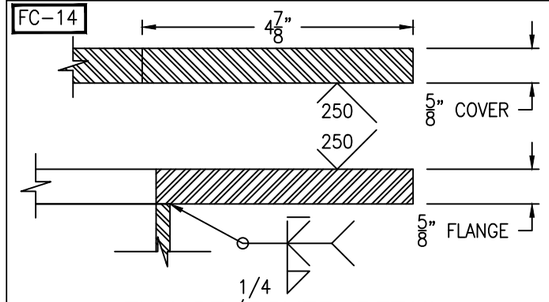

FLANGE/COVER DETAIL

(1 REQ'D) SCALE: 6" = 1'-0"

FC-14

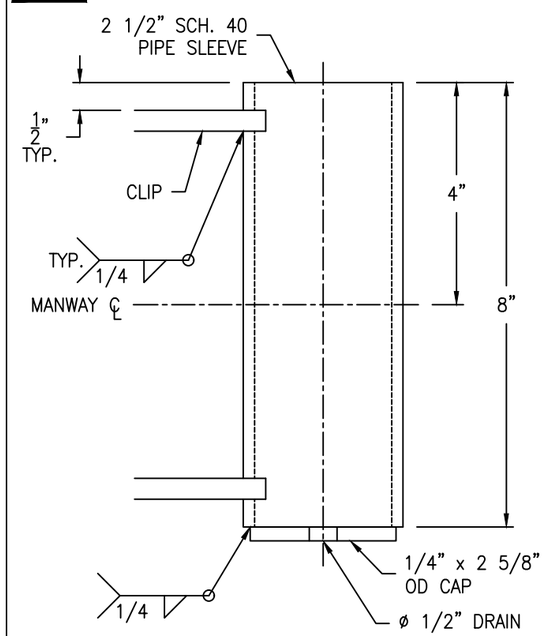

SLEEVE DETAIL

(1 REQ'D) SCALE: 6" = 1'-0"

FC-14

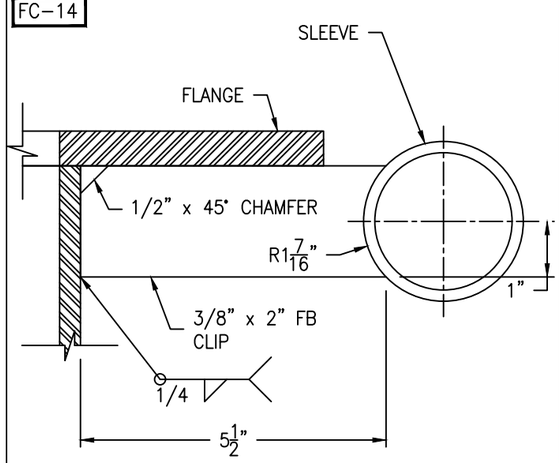

CLIP DETAIL

(2 REQ'D) SCALE: 6" = 1'-0"

FC-14

Bolting for blind
(28) 3/4-10 NC x 2 1/2" HH BOLT
(28) 3/4-10 NC HH NUT
(1) 29 3/8" OD x 24" ID x 1/8" GASKET

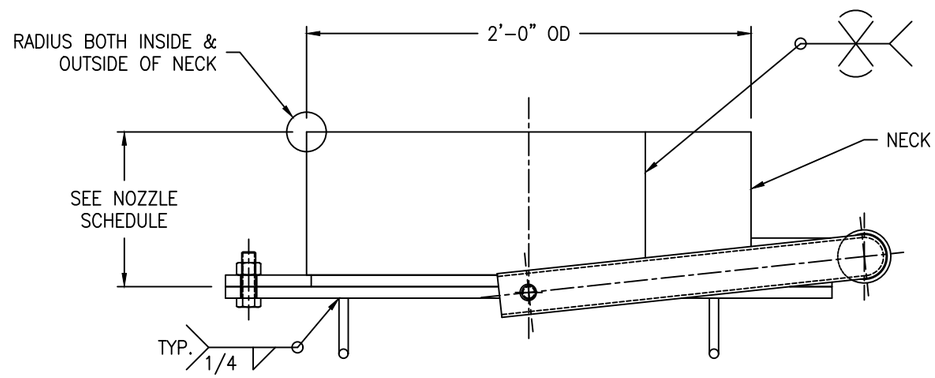

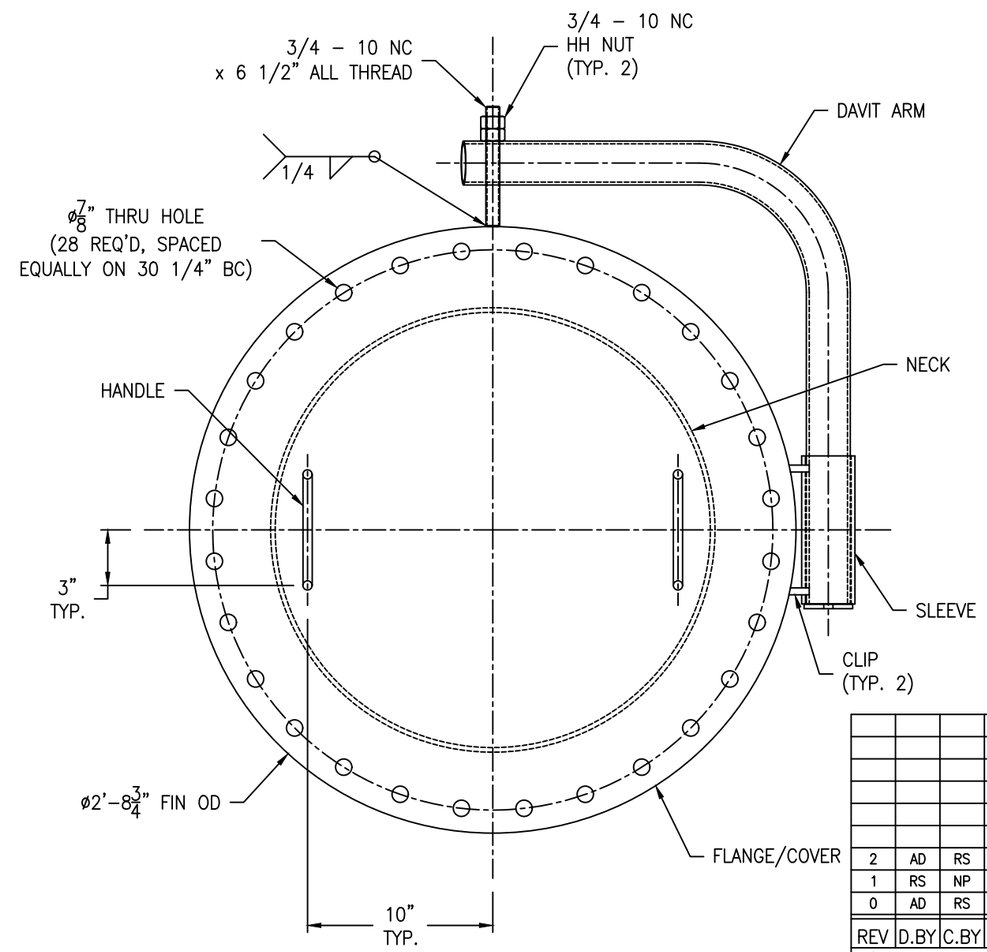

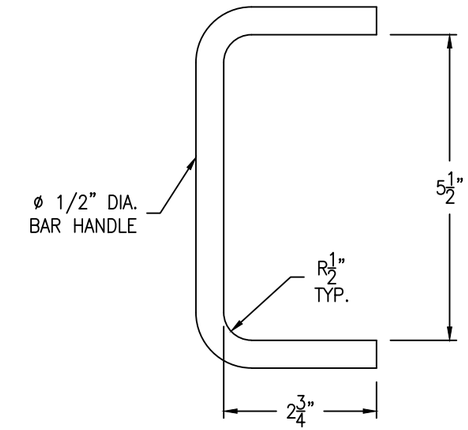

HANDLE DETAIL

(2 REQ'D) SCALE: 6" = 1'-0"

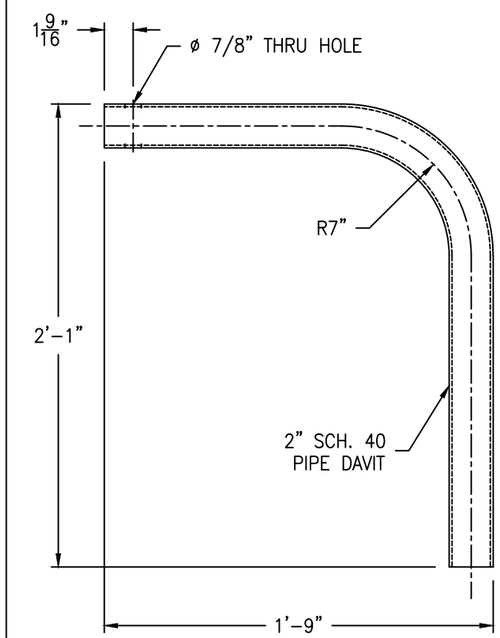

DAVIT ARM DETAIL

(1 REQ'D) SCALE: 2" = 1'-0"

REV	D.BY	C.BY	DATE	DESCRIPTION
				AS BUILT
2	AD	RS	2/4/26	CERTIFIED
1	RS	NP	1/21/26	APPROVAL REV 1
0	AD	RS	12/9/25	APPROVAL

⚠1 REVISIONS

Savannah Tank & Equipment Corp.
1517 Telfair Road, Savannah, GA 31415
(912) 233-8902

DRAWN BY: AD
CHK'D BY: RS
APPROVED BY: NP
SCALE: 2" = 1'-0"

EPIC SYSTEMS GROUP, LLC.
ISOSTEARIC ACID TANK
EQUIP. #T-104
CUST. PO #64354

DRAWING NO.: 103-25-6 SHT 6 OF 6 REV. SET 2